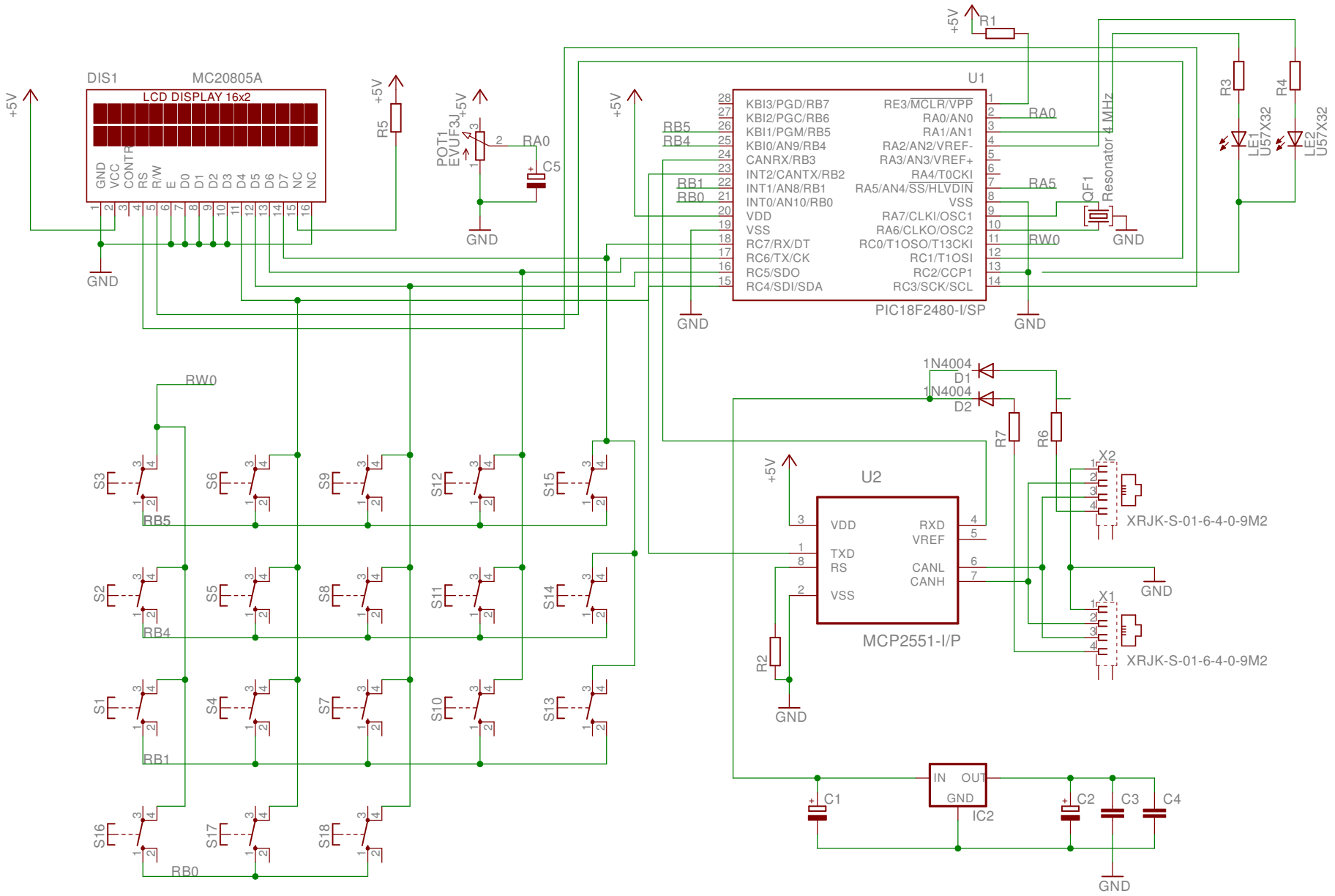

1-1-2018 21:01:11 C:\Users\Giling-pc\Documents\eagle\CAN-GC5\CAN-GC5-V2.sch (Sheet: 1/1)