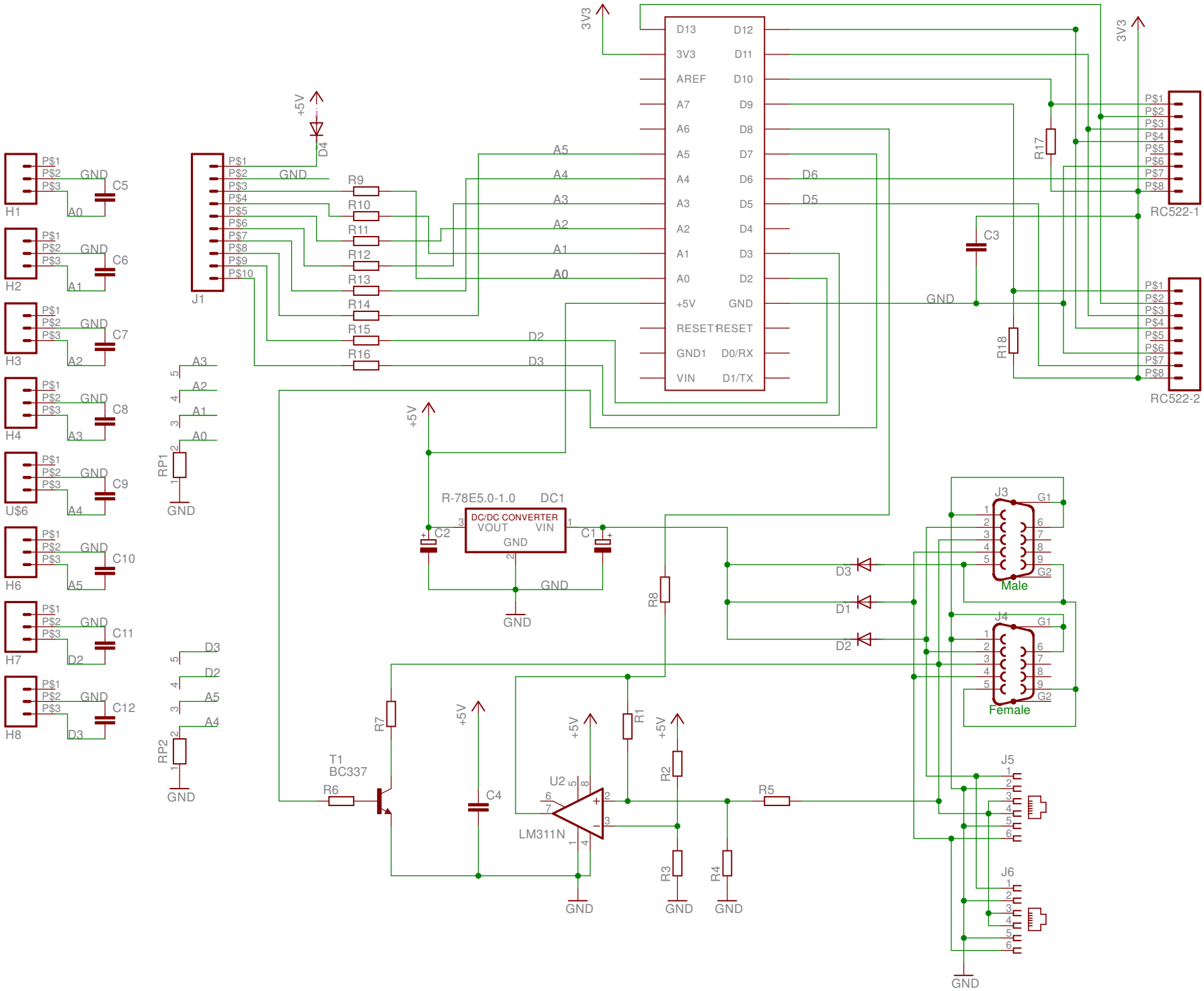

30-11-2016 21:12:00 f=0.96 C:\Users\GCA\Documents\eagle\GCA51\GCA51.sch (Sheet: 1/1)