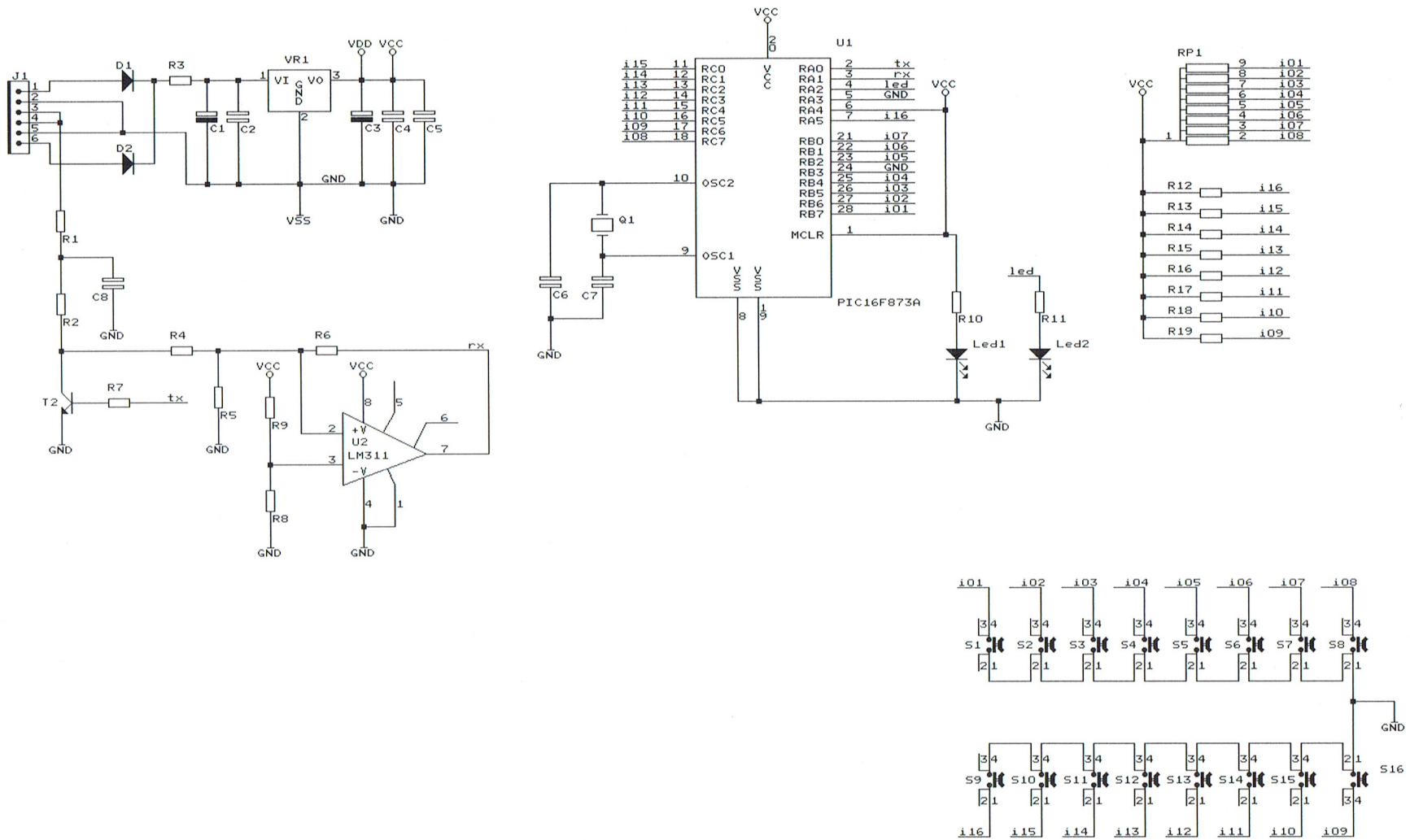

peter.giling@modelspoorgroepvenlo.nl		
Title	Mobile turnout keyboard	
Size B	Document Number GCA123	REV 1.0
Date: May 9, 2017	Sheet of	