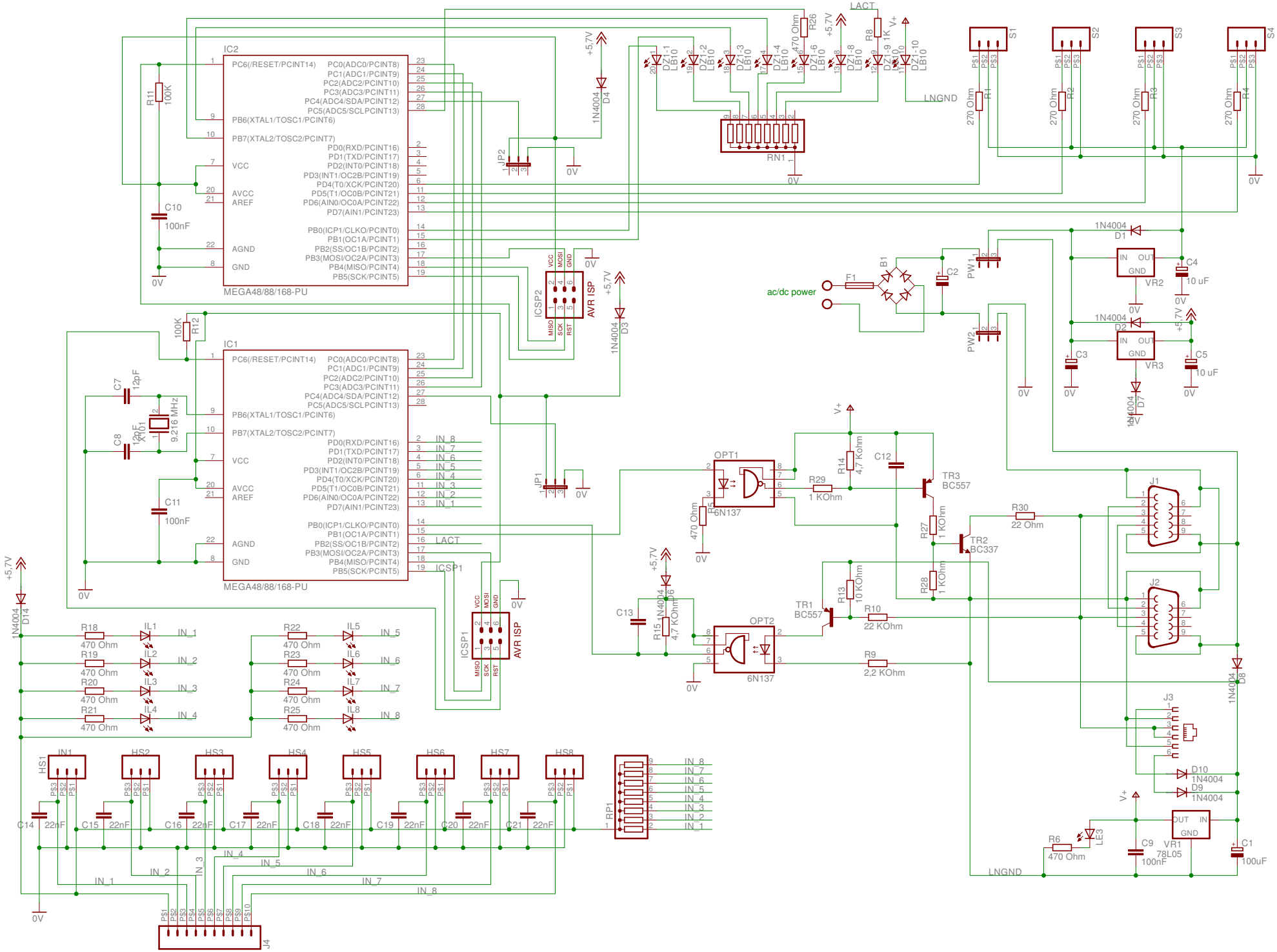

6-6-2015 16:44:07 f=0.74 H:\Layo1\PROJ\GCA183\Eagle\GCA183.sch (Sheet: 1/1)